Model VR448COAX

4-Port PoE Switch with Network Extender

Installation and Operation Manual

Introduction

The VR448COAX Network Extender is designed to greatly extend the distances to which IP cameras and other network devices can operate. The VR448COAX Network Extender consists of two units, a 4-port transmitter and a receiver. Only the transmitter provides PoE to the connected network device. The receiver is installed at the NVR/IP equipment side and the transmitter at the IP camera side of the installation.

RECEIVER

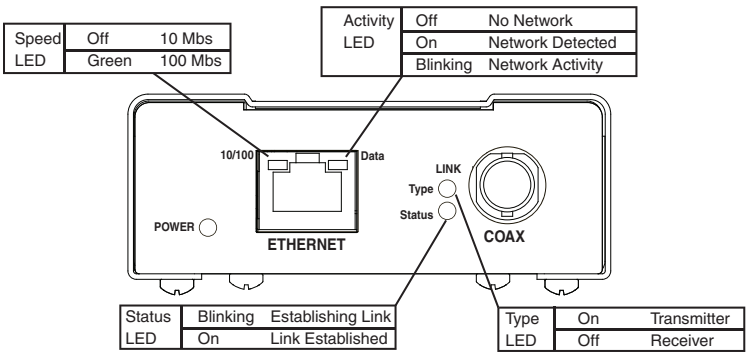

FRONT

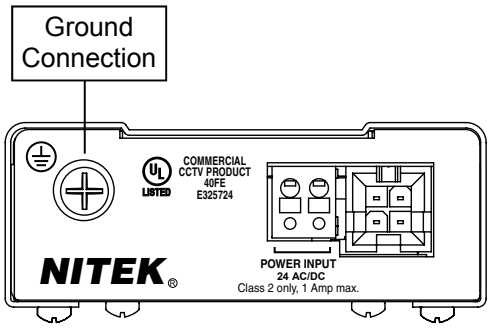

BACK

TRANSMITTER

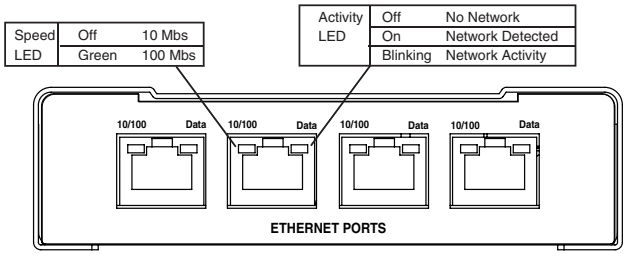

FRONT

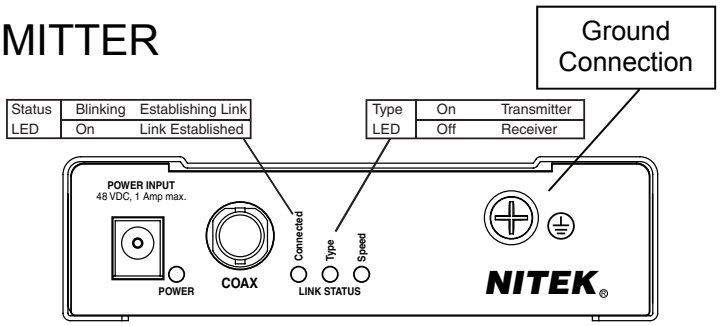

BACK

Note: A sticker on the bottom of each unit identifies whether it is the transmitter or the receiver.

NITEK®

USA
5410 Newport Drive, # 24
Rolling Meadows, IL 60008
Phone: (847) 259-8900
Fax: (847) 259-1300
E-mail: info@nitek.net
WWW.NITEK.NET

EUROPE
De Schans 19-21 2a
8231 KA Lelystad
Tel: +31(0)320-2300005
Fax: +31(0)320-282186
E-mail: info@nitek.nl
WWW.NITEK.NL

072110 681200106

VR448COAX Network Extender Installation Drawing

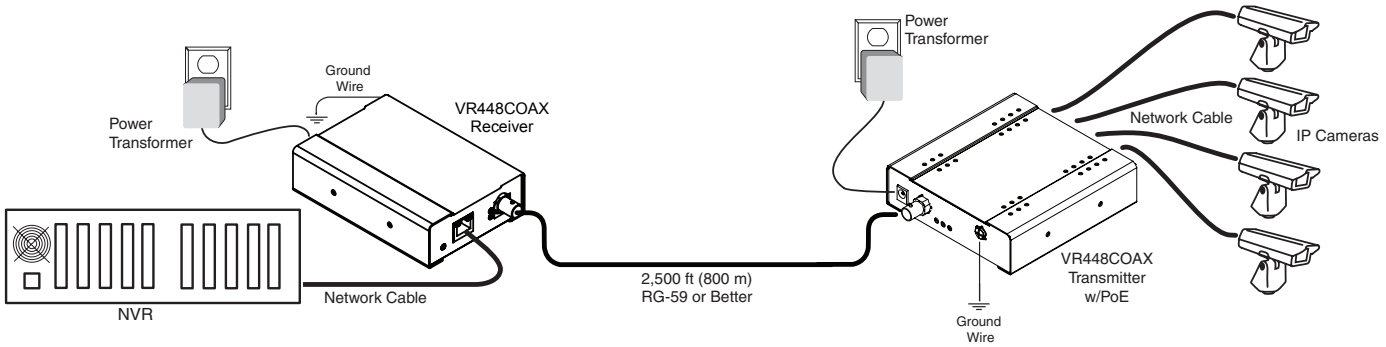

The separate protective earthing terminal provided on this product shall be permanently connected to earth.

Install Network to VR448COAX and IP Cameras

1) Connect an earth ground to each unit before making any additional connections.

2) Connect a network cable from the receiver to the security room or IP network equipment.

3) Connect a coaxial cable between the transmitter and the receiver.

4) Connect a network cable from the transmitter's four Ethernet jack to the IP cameras or other network devices.

5) Connect the Class 2 power transformer to the push in power connector of the VR448COAX receiver. The unit requires 24VAC or VDC @ 1 Amp. There is no polarity to these terminals.

6) Connect the 48VDC 1A power supply to the power connector of the VR448COAX transmitter.

.

Normal Operation

When power is applied to both units the Network LED's will come on and the link status LED will blink for about 30 seconds as the link is being optimized. When the link is stable the link status LED will remain "ON". The Ethernet data LED will blink with network activity.

Troubleshooting

After completing installation, if the units are not operating properly, check each step at each unit in order.

1) If the Power LED is off verify the unit's power connections and verify that the power source is on an active circuit.

2) If the link status LED does not stop blinking, verify that the coax cable has been properly installed and make sure the receiver's link Type LED is "OFF" and that the transmitter's link Type LED is "ON".

3) If the Activity LED is "OFF" verify you have power to the camera and good connections to the RJ45 connectors.

4) If the activity LED is "ON" and the link status LED is "ON" and there is no picture, verify camera IP address and monitoring IP address are proper and refresh the monitor. Directly attach the camera through a short patch cable directly to NVR/IP network. Verify that camera and monitor programs are properly functioning.